DRILL PRESS

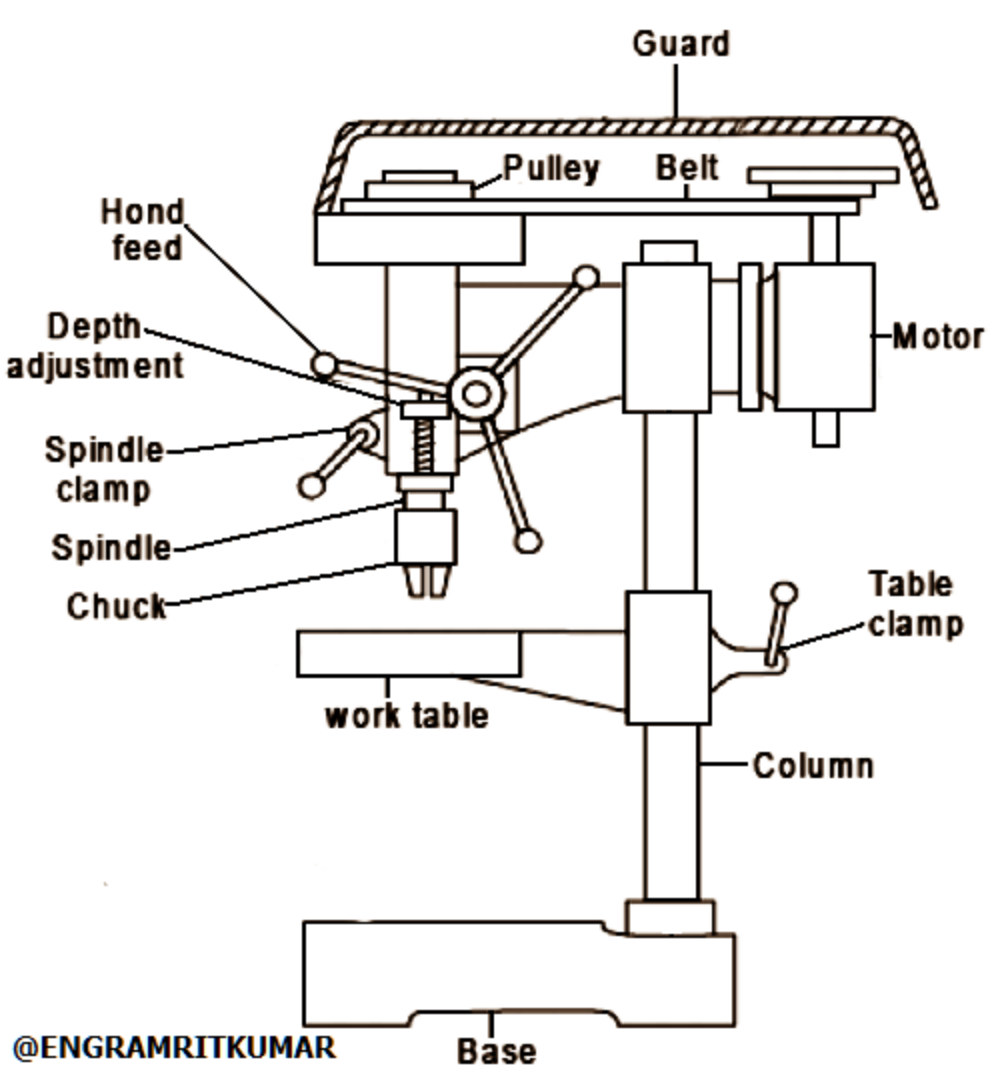
Guard
Pulley
Belt
Hond feed
Depth adjustment
Motor
Spindle clamp
Spindle
Chuck
Table clamp
work table
Column
Base
@ENGRAMRITKUMAR

◦	Tie long hair back.
◦	Remove all strings and/or jewelry that could get caught in the drill press.
◦	The material you intend to drill must be held in the drill vice or be clamped to the drill table. This will prevent it from spinning around and hurting you if the drill bit were to catch as it went through.
◦	Be sure to 'centre punch' hard materials like metals before you drill them. The punch mark will prevent the drill bit from slipping around as you try to start the hole.
◦	Set appropriate drill speed for the drillbit.
◦	Make sure the chuck key is out of the chuck every time you go to start the drill.
◦	If you are drilling a series of holes or are in a rush to get onto the next job, slow down to make sure the bit is clear of the stock before you move it. If you do move the stock when the bit is still in the hole, you could break the bit.
◦	Set up your operation to avoid drilling into the vice or table. Put some scrap wood under your work, or position it in the vice so that the bit will come through in the centre or at the side of the vice.

		PM CHART
		Maximum R
Drill Size	Decimal	Mild Steel
1/16	0.0625	6723
3/32	0.09375	4482
1/8	0.125	3362
9/64	0.140625	2988
5/32	0.15625	2689
3/16	0.1875	2241
7/32	0.21875	1921
1/4	0.25	1681
9/32	0.28125	1494
5/16	0.3125	1345
3/8	0.375	1121
1/2	0.5	840