Bench Grinder

Basic Design

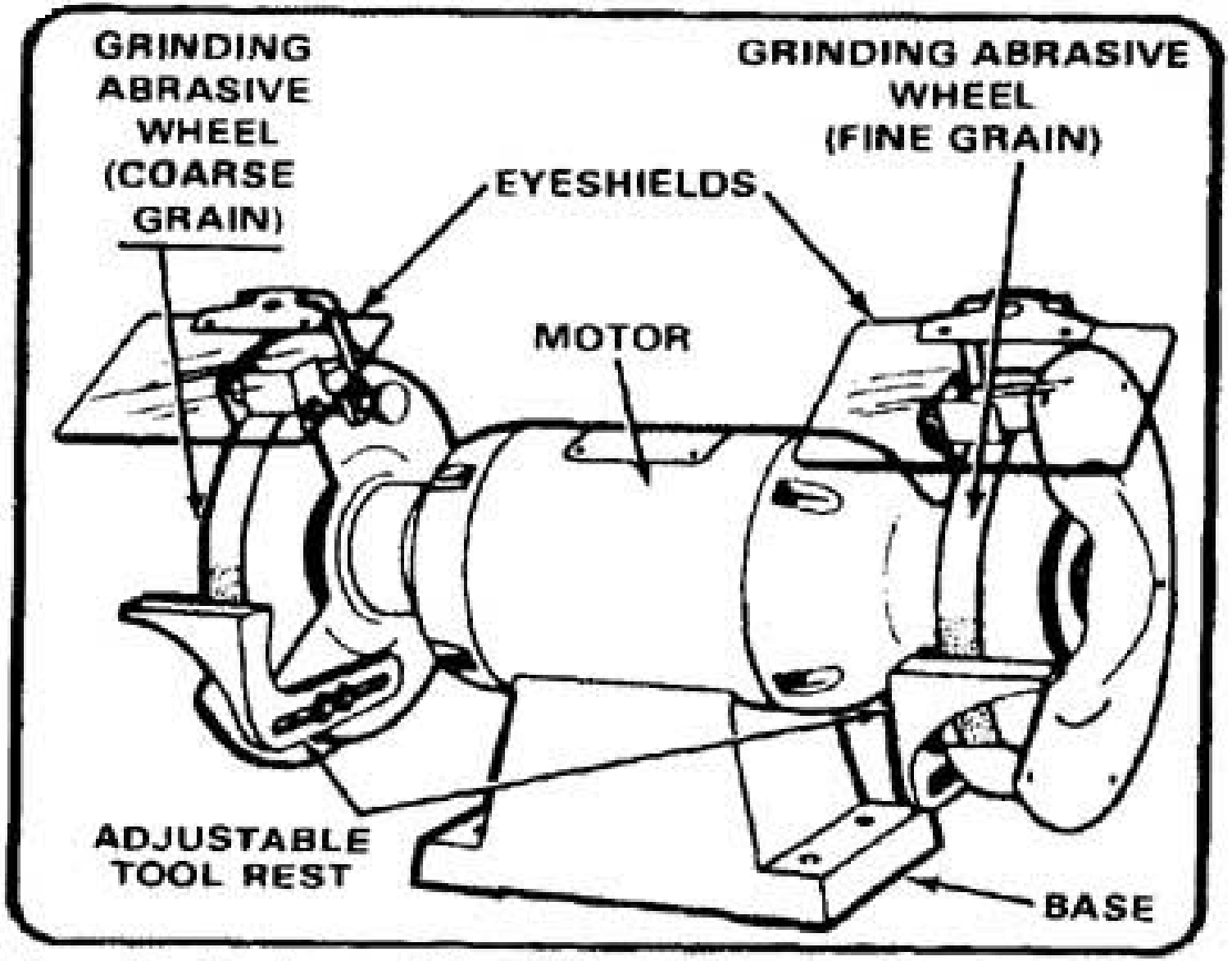

Figure 5-2. Bench-type utility grinding machine.

◦	Inspect the grinder prior to use to ensure there are no cracks in the abrasive disc.
◦	Check there are no flammables in the area of the grinder.
◦	Use wheel dressing procedures whenrequired.
◦	Keep the tool rest within 1.5mm of the stone at all times. If there is too much room between the stone and the rest, your work could jam causing the stone to shatter. At the speed it is turning, you don't want that to happen.
◦	If the stone has a flaw, it is most likely to fly apart as it speeds up, just after you start it. Always stand to the side when starting the grinder, just incase.
◦	Only grind on the face of the stone, never on the side-it could explode in your face.
◦	Work should be moved back and forth across the face of the stone to avoid creating a groove in the center.

◦ Use moderate pressure when grinding. If you push too hard, you will stress the machine and the stone, and generate unnecessary heat in the material you are grinding.
◦ Avoid grinding small pieces or, if necessary, hold them firmly in vice grips. Small pieces could easily be pulled out of your grasp and cause problems.
◦ Do not grind either sheet metal or soft metals like brass or aluminum on the grinder. Sheet metal vibrates too much and can easily get caught, and non-ferrous metals such as aluminum can quickly plug up the stones.
◦ Grinding generates a lot of heat in the metal being ground. Cool your material regularly and take care not to burn yourself when it is hot. If you are using the grinder to sharpen tools, be aware that too much heat can ruin the temper in tool steel- this is not good for your tools.
◦ Full face shield, leather apron and hearing protection are required.

Buffer & Wire Wheel

◦ The biggest danger on the buffer or wire wheel is having the wheel grab your work. This could happen if the wheel were to hook on a corner or the edge of your work. To prevent this from happening, hold your work so the wheel is spinning off the corners.
◦ Hold your work against the wheel just below the middle point. If the wheel should grab it, it will throw it down and away from you.
◦ Buffing can generate a fair amount of heat, so handle your work with care to avoid getting burnt.
◦ Strands of wire from the wire wheel can come loose. Be sure to wear eye protection.